TP 3000
manual
146 - 174 MHz

TP RADIO

Technical description TP 3000

Receiver 2m.

The incoming signal goes via the arial switch, which is a relay to the RF amplifier consisting of a bipolar transistor Q 1 and several tuned circuits to give the necessary selectivity.

The first mixer, which is a single gate junction FET, Q 2 converts the RF signal 146-174 Mhz, to 21,4 Mhz the first IF. The oscillator injection 167, 4-195,4 Mhz is injected into the source of the FET.

The IF signal is supplied to the following X-tal filter via a matching tuned circuit, and from the X-tal filter is fed to a following dual gate MOS FET amp. Q 3, giving 20 db gain. This stage is followed by the second mixer IC 1, which converts the 21,4 Mhz to 455 Khz. This mixer is an integrated balanced mixer.

It containes both mixer and oscillator with an external X-tal.

The 455 Khz IF is fed via a tuned circuit L 10 to the discriminator IC 2. The coil L 11 is the detector coil in the quadrature detector circuit. The AF output is supplied to the amplifier and squelch circuit by an emitter follower Q 4.

The AF signal goes via the electronic attenuator, consisting of the diodes D 5 and D 6. When a DC voltage is applied to these diodes, the diode current will more or less short the AF signal. The applied DC voltage is the volume control.

The volume control circuit is followed by an amplifier Q 5 which compensates in loss of signal from the following deemphasis R 34 and C 45.

The signal is then fed to the integrated audio power amplifier IC 3 which gives approx. 3-4 watt output power into the 4 ohm loudspeaker.

Pin no. 5 is used to block AF amplifier both from squelch and external blocking circuits.

The squelch circuit consists of an 7-8 Khz tuned amplifier Q 10 followed by the noise detector D 10 and D 11. When the rectified noise voltage is negativ Q 9 is activated and Q 7 is activated and Q 7 blocks the AF power amplifier.

The squelch regulation is made by a DC voltage from the control box. When the squelch is open or the channel is used, the occupied lamp is lit by means of Q 6.

Blocking of the amplifier is accomplished by the diodes D 7, D 8 and D 9.

Technical description TP 3000

2m Transmitter

The vco signal is here 21,4 Mhz higher than the receiver input frequency, therefore in order to get the transmitter frequency, a mixer is necessary.

The transmitter mixer is a balanced integrated transistor mixer, IC 1, and the local oscillator is a combined crystal osc/doubler. For simplex operation the crystal therefore must be 10,7 Mhz.

The transmitter amplifier consists of Q 1, Q 2, Q 3 and Q 4 and several tuned circuits in order to get sufficient supression of unwanted sidebands, and the necesarry output power of min. 200 mW to the power amplifier.

The 25 W power amplifier consists of the stages Q 1, Q 2 and Q 3, and a power sensing and regulation circuit IC 1 and Q 4.

From the power sensing circuit, a DC-voltage proportional to the forward output power, is led to the regulation amplifier and compared to a zener reference-voltage, and if the voltage is higher than this reference voltage, the regulation transistor Q 4 will reduce the supply voltage for the driver transistor Q 1 and thereby the output power.

The output power is adjustable between 10-25 W with the potentiometer R 12.

Note that the last two transistors in the power amplifier, are supplied independent of the key.

The TX indicator is driven by the output power.

The power amplifier is followed by the antenna filter which suppresses the harmonics from the transmitter.

Modulation amplifier.

The modulation amplifier consists of Q 7, IC and IC 3. Q 7 is the preamplifier giving a sensitivity of max. 1 mv in 1 K ohm.

It is followed by the preemphasis condenser C 32 and the sensitivity potentiometer P 1.
From here the signal is fed to the amplifier an clipper, IC 3, which limits the max output voltage.
The clipper is followed by IC 2 here used as a 3 Khz active low pass filter.
The output to the vco is adjustable with P 2.
When the tone tx input is used, transistor Q7 is blocked via D4.

Technical description TP 3000

Synthesizer

The synthesizer logic in the TP 3000 is based upon the modulus prescaling technique. The princible is shown in the block diagram.

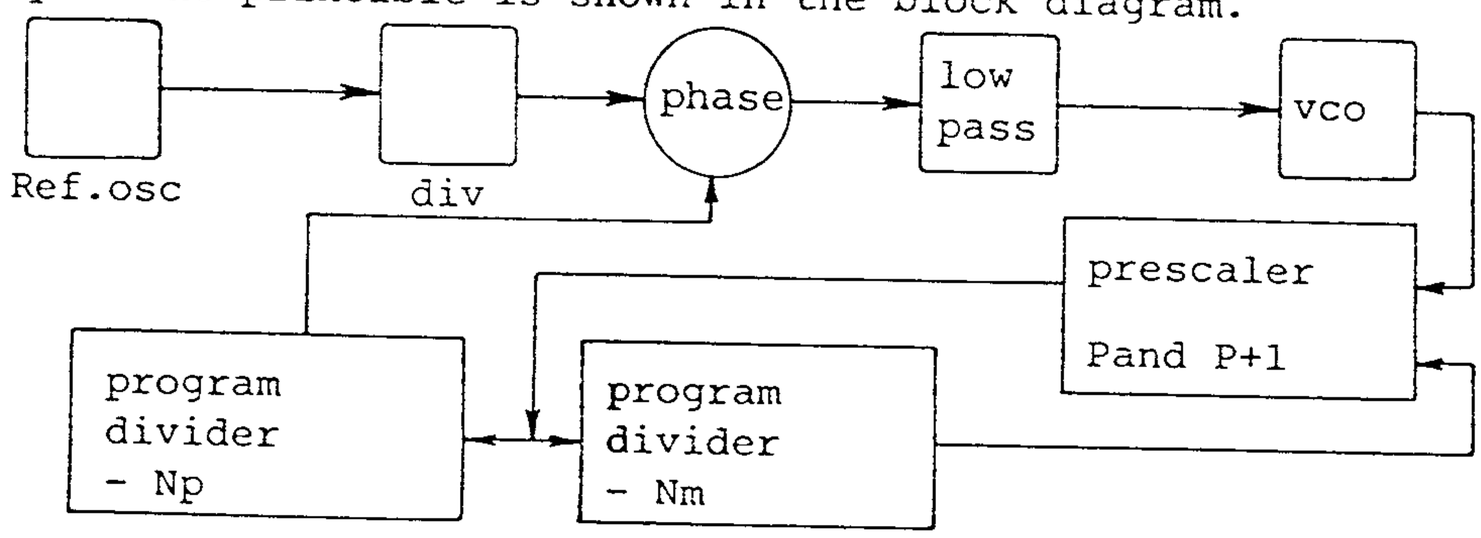

The operation is as follows:

First the prescaler divides by P+1, Nm times. Every time a P+1 pulse enters the prescaler both the Nm counter and the Np counter are decremented by 1. This continues until the Nm counter reaches zero.
At the end of (p+1) Nm pulses, the state of the Np counter is equal to (Np-Nm). Then the modulus of the prescaler is changed to P by the Nm counter. The modulus prescaler continues to divide by P until the remaining count (Np-Nm) in the Np counter is decremented to zero. When this is completed, both counters are reset and ready to start a new cycle.

In the TP 3000 an extra control logic, IC 15, is used to control the prescaler and the timing of the two dividers Np and Nm.
After each count cycle the counter logic delivers an output pulse. This pulse is fed to the phase detector IC 16 and compared to the reference signal in frequency and phase.
When the two signals are either out of phase or frequency, the phase comperator delivers an output voltage proportional to these differencies, to the vco which in turn then tries to correct the state.

The reference oscillator consists of IC 4 and a 6,4 Mhz x-tal.

One gate is used as oscillator, the others as buffers.
The main frequency is adjusted by C 95.
The reference signal is divided down to 25 Khz by means of two dividers which are contained in the phasecomperator IC 16.

The comperator output voltage goes through an active low pass filter in order to suppres 25 Khz ripple before entering the vco.
IC 5 gives some DC amplification.

The voltage controlled oscillator consists of Q 11 and L 13, C 70.

The tuning condenser C 70 makes it possible to adjust the vco Frequency within the full 2m band.
The frequency is controlled by the tuning diode, D 12 and the diode D 13 is for the modulation.

The output from the oscillator goes to a commen buffer transistor Q 12, and from there to the three output buffers Q 13 to Q 17.

Channel programming

Computation of the channel code.

We have $$Fvco = \frac{MNpc + Nmc}{0,025} \text{ Mhz} \quad (1)$$

Npc = division ratio of the "coarse" divider where

512 Npc 1023

M = 10

Nmc = division ratio of the "fine" divider where

0 Nmc 127

The receiver frequency lies 21,4 Mhz below the vco frequency

$$Frx = \frac{MNpc + Nmc}{0,025} - 21,4 \text{ Mhz} \quad (2)$$

The total division ratio $NT = \frac{Fvco}{0,025} = MNpc + Nmc \quad (3)$

Example 1.

Known is the receiver frequency = 150,025 Mhz.
We want to find the division ratio of both the coarse and fine dividers.

We have $$Fvco = 150,025 + 21,4 = 171,425 \text{ Mhz}$$

From (3) $$NT = \frac{171,425}{0,025} = 6857$$

Entering table 1. we select Npc = 681 and we have further that M = 10.

Using (3) once more and rearranging, we get

$$Nmc = NT - MNpc = 6857 - (10x681) = 47$$

This might be checked according to the working princible.

Counter Nm is set to 47 and is letting the prescaler count to 11, 47 times.
This makes 517 pulses.

Counter Np is set 681 and decremented with 47 before the prescaler change modulus. When this happens the prescaler counts to 10 (681 - 47) making 6340 pulses.
The total division ratio is then 6340 - 517 = 6857.

Frequency band code

The code of the coarse divider is set once and for all manually by strapping the desired inputs.
By the number 681 this is accomplished as follows.

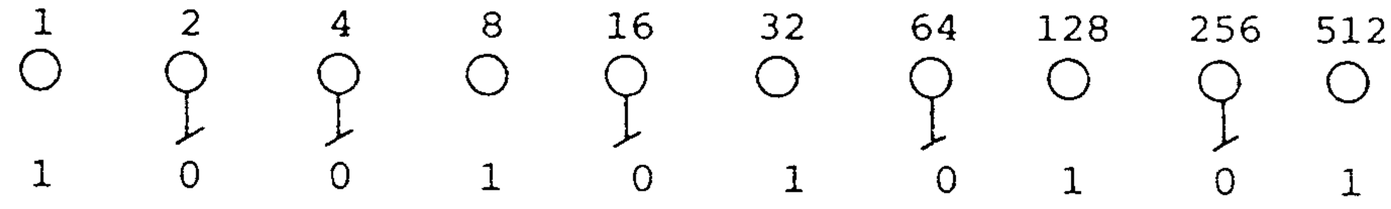

All inputs are normally high.

The programmed no. is calculated on high inputs.

Channel code

For the channel code a special code plug is used for the strapping procedure, when only one channel is wanted.

In our example we have to program the figure 47.
This is shown below.

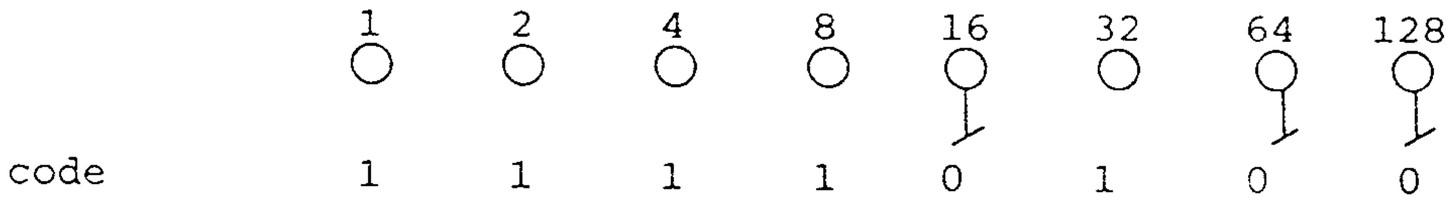

The code is read on high inputs.

When more than one channel is wanted another codeplug with a PROM must be used.

Is must be noted when programming the PROM, that the input code is BCD + 1.

Channel control box	1	2	4	8	PROM channel
1	0	0	0	0	0
2	1	0	0	0	1
3	0	1	0	0	2
4	1	1	0	0	3
5	0	0	1	0	4
6	1	0	1	0	5
7	0	1	1	0	6
8	1	1	1	0	7
9	0	0	0	1	8
10	1	0	0	1	9
11	0	1	0	1	10
12	1	1	0	1	11

spacings beregning (kodning)
phasedetector har en fast deler på 64
så beregning af kodning af spacing er
ref. F_x = 6.4 MHz div. med spacing
div. med 64. ex. 6.4 MHz : 25 kHz : 64 = 4

CODES FOR 25 Khz SPACING.

Receiver Frequency Mhz	Coarse divider ratio X10	Prescaler 10/11 1	2	4	8	16	32	64	128	256	512
146 - 149	6690	1	0	1	1	1	0	0	1	0	1
147.5 - 150.5	6750	1	1	0	0	0	1	0	1	0	1
149 - 152	6810	1	0	0	1	0	1	0	1	0	1
150.5 - 153.5	6870	1	1	1	1	0	1	0	1	0	1
152 - 155	6930	1	0	1	0	1	1	0	1	0	1
153.5 - 156.5	6990	1	1	0	1	1	1	0	1	0	1
155 - 158	7050	1	0	0	0	0	0	1	1	0	1
156.5 - 159.5	7110	1	1	1	0	0	0	1	1	0	1
158 - 161	7170	1	0	1	1	0	0	1	1	0	1
159.5 - 162.5	7230	1	1	0	0	1	0	1	1	0	1
161 - 164	7290	1	0	0	1	1	0	1	1	0	1
162.5 - 165.5	7350	1	1	1	1	1	0	1	1	0	1
164 - 167	7410	1	0	1	0	0	1	1	1	0	1
165.5 - 168.5	7470	1	1	0	1	0	1	1	1	0	1
167 - 170	7530	1	0	0	0	1	1	1	1	0	1
168.5 - 171.5	7590	1	1	1	0	1	1	1	1	0	1
170 - 173	7650	1	0	1	1	1	1	1	1	0	1
171.5 - 174.5	7710	1	1	0	0	0	0	0	0	1	1

Calculation example:

Wanted is a receiver frequency of 162.725 Mhz.

Step 1. Find the total division ratio according to:

$$NT = \frac{FRx + 21,4}{0.025} = \frac{162.725 + 21,4}{0.025} \text{ Mhz} = 7365$$

Step 2. Find the division ratio of the coarse divider by entering the table above. Two possibilities are found: 7290 and 7350. We choose 7290. The coarse divider is then coded according to the table. e.i. 1 0 0 1 1 0 1 1 0 1

Step 3. Find the division ratio of the channel divider.
This is simply don by subtracting the coarse division ratio from the total division ratio.:

7365 - 7290 = 75

This code is written:	1	2	4	8	16	32	64
	1	1	0	1	0	0	1

Note that before coding all inputs are "high".
Mark the bits which must be "1" and connect all other bits to chassis.

CODES FOR 20 Khz SPACING.

Receiver Frequency Mhz	Coarse divider ratio X 10	Coarse divider code Prescaler 10/11									
		1	2	4	8	16	32	64	128	256	512
146 - 148	8350	1	1	0	0	0	0	1	0	1	1
147 - 149	8400	0	0	0	1	0	0	1	0	1	1
148 - 150	8450	1	0	1	1	0	0	1	0	1	1
149 - 151	8500	0	1	0	0	1	0	1	0	1	1
150 - 152	8550	1	1	1	0	1	0	1	0	1	1
151 - 153	8600	0	0	1	1	1	0	1	0	1	1
152 - 154	8650	1	0	0	0	0	1	1	0	1	1
153 - 155	8700	0	1	1	0	0	1	1	0	1	1
154 - 156	8750	1	1	0	1	0	1	1	0	1	1
155 - 157	8800	0	0	0	0	1	1	1	0	1	1
156 - 158	8850	1	0	1	0	1	1	1	0	1	1
157 - 159	8900	0	1	0	1	1	1	1	0	1	1
158 - 160	8950	1	1	1	1	1	1	1	0	1	1
159 - 161	9000	0	0	1	0	0	0	0	1	1	1
160 - 162	9050	1	0	0	1	0	0	0	1	1	1
161 - 163	9100	0	1	1	1	0	0	0	1	1	1
162 - 164	9150	1	1	0	0	1	0	0	1	1	1
163 - 165	9200	0	0	0	1	1	0	0	1	1	1
164 - 166	9250	1	0	1	1	1	0	0	1	1	1
165 - 167	9300	0	1	0	0	0	1	0	1	1	1
166 - 168	9350	1	1	1	0	0	1	0	1	1	1
167 - 169	9400	0	0	1	1	0	1	0	1	1	1
168 - 170	9450	1	0	0	0	1	1	0	1	1	1
169 - 171	9500	0	1	1	0	1	1	0	1	1	1
170 - 172	9550	1	1	0	1	1	1	0	1	1	1
171 - 173	9600	0	0	0	0	0	0	1	1	1	1
172 - 174	9650	1	0	1	0	0	0	1	1	1	1
173 - 175	9700	0	1	0	1	0	0	1	1	1	1

Calculation example:
Wanted is a receiver frequency of 152.120 Mhz.

Step 1.

Find the total division ratio according to $NT = \frac{FRx + 21,4 \text{ Mhz}}{0,02}$

$$\frac{152.120 + 21,4 \text{ Mhz}}{0,02} = 8676$$

Step 2.

Find the division ratio of the coarse divider by entering the table above. Two possibilities are found 8600 and 8650. We choose 8600 for the coarse divider, which is coded according to the table:

1	2	4	8	16	32	64	128	256	512
0	0	1	1	1	0	1	0	1	1

Step 3.

Find the division ratio of the channel divider.
This is simply done by subtracting the coarse division ratio from the total division ratio:
8676 - 8600 = 76 which is the channel code.

Note that before coding all inputs are in the "high" state.
Mark the bits which must be "1" and connect all other bits to chassis.

On frequencies with an odd spacing ex. 152.130 Mhz, the division ratio here is 8676.5. Go to the lowest integer, that is 8676, and readjust the main frequency. This procedure is valid for frequencies ending on 010 - 030 - 050 - 070 - 090 Khz.

Lux dobb. mod
Order 10201

BAND CODES 20 KHz SPACING
Prescaler 32/33

Receiver Frequency MHz	Divider Ratio	Total Ratio Nt.	1	2	4	8	16	32	64	128	256
145.640 - 148.180	261	8352		0		0	0	0	0	0	
146.280 - 148.820	262	8384	0			0	0	0	0	0	
146.920 - 149.46	263	8416				0	0	0	0	0	
147.560 - 150.10	264	8448	0	0	0		0	0	0	0	
148.20 - 150.74	265	8480		0	0		0	0	0	0	
148.84 - 151.38	266	8512	0		0		0	0	0	0	
149.48 - 152.020	267	8544			0		0	0	0	0	
150.120 - 152.660	268	8576	0	0			0	0	0	0	
150.760 - 153.300	269	8608		0			0	0	0	0	
151.400 - 153.94	270	8640	0				0	0	0	0	
152.040 - 154.58	271	8672					0	0	0	0	
152.680 - 155.22	272	8704	0	0	0	0		0	0	0	
153.32 - 155.86	273	8736		0	0	0		0	0	0	
153.96 - 156.50	274	8768	0		0	0		0	0	0	
154.60 - 157.14	275	8800			0	0		0	0	0	
155.24 - 157.78	276	8832	0	0		0		0	0	0	
155.88 - 158.42	277	8864		0		0		0	0	0	
156.52 - 159.06	278	8896	0			0		0	0	0	
157.16 - 159.70	279	8928				0		0	0	0	
157.80 - 160.34	280	8960	0	0	0			0	0	0	
158.44 - 160.98	281	8992		0	0			0	0	0	
159.08 - 161.62	282	9024	0		0			0	0	0	
159.72 - 162.26	283	9056			0			0	0	0	
160.36 - 162.90	284	9088	0	0				0	0	0	
161.00 - 163.54	285	9120		0				0	0	0	
161.64 - 164.18	286	9152	0					0	0	0	
162.28 - 164.82	287	9184						0	0	0	
162.92 - 165.46	288	9216	0	0	0	0	0		0	0	
163.56 - 166.10	289	9248		0	0	0	0		0	0	
164.20 - 166.74	290	9280	0		0	0	0		0	0	
164.84 - 167.38	291	9312			0	0	0		0	0	
165.48 - 168.02	292	9344	0	0		0	0		0	0	
166.12 - 168.66	293	9376		0		0	0		0	0	
166.76 - 169.30	294	9408	0			0	0		0	0	
167.40 - 169.94	295	9440				0	0		0	0	
168.04 - 170.58	296	9472	0	0	0		0		0	0	
168.68 - 171.22	297	9504		0	0		0		0	0	
169.32 - 171.86	298	9536	0		0		0		0	0	
169.96 - 172.50	299	9568			0		0		0	0	
170.60 - 173.14	300	9600	0	0			0		0	0	
171.24 - 173.78	301	9632		0			0		0	0	
171.88 - 174.42	302	9664	0				0		0	0	

1-3

Monday

Locally

Note: This code table is only valid for sets manufactored after 1.8.1987.
Using a dual modulus prescaler with the division ratio 32/33.

BAND CODES 25 Khz SPACING
PRESCALER 32/33

Receiver Frequency Mhz	Divider Ratio	1	2	4	8	16	32	64	128	256
145.800 - 148.975	209		0	0	0		0			0
146.600 - 149.775	210	0		0	0		0			0
147.400 - 150.575	211			0	0		0			0
148.200 - 151.375	212	0	0		0		0			0
149.000 - 152.175	213		0		0		0			0
149.800 - 152.975	214	0			0		0			0
150.600 - 153.775	215				0		0			0
151.400 - 154.575	216	0	0	0			0			0
152.200 - 155.375	217		0	0			0			0
153.000 - 156.175	218	0		0			0			0
153.800 - 156.975	219			0			0			0
154.600 - 157.775	220	0	0				0			0
155.400 - 158.575	221		0				0			0
156.200 - 159.375	222	0					0			0
157.000 - 160.175	223						0			0
157.800 - 160.975	224	0	0	0	0	0				0
158.600 - 161.775	225		0	0	0	0				0
159.400 - 162.575	226	0		0	0	0				0
160.200 - 163.375	227			0	0	0				0
161.000 - 164.175	228	0	0		0	0				0
161.800 - 164.975	229		0		0	0				0
162.600 - 165.775	230	0			0	0				0
163.400 - 166.575	231				0	0				0
164.200 - 167.375	232	0	0	0		0				0
165.000 - 168.175	233		0	0		0				0
165.800 - 168.975	234	0		0		0				0
166.600 - 169.775	235			0		0				0
167.400 - 170.575	236	0	0			0				0
168.200 - 171.375	237		0			0				0
169.000 - 172.175	238	0				0				0
169.800 - 172.975	239					0				0
170.600 - 173.775	240	0	0	0	0					0
171.400 - 174.575	241		0	0	0					0
172.200 - 175.375	242	0		0	0					0
173.000 - 176.175	243			0	0					0
173.800 - 176.975	244	0	0		0					0

Note: This code table is only valid for sets manufactored after 1.8.1987 using a dual modulus prescaler with the devision ratio 32/33.

TUNING INSTRUCTIONS TP 3000 2m.

SYNTHESIZER.

First of all the set must be coded to the right channel, and the lock det. must be coded to switch all the unused channels off with bit 128 on Prom. This is done according to the instructions contained in the technical description of the synthesizer circuit.
Check the channel code and if the set containes more than one channel, select one in the middle of the band.
Check the reference oscillator with an oscilloscope on IC 4 pin 4 on print board TP103.
Connect a high input resistance DC-voltmeter to MP3, and turn the trimmer-condenser C70 until a voltage movement is obtained. Then adjust C70 until a reading of app. 4 volts is obtained. The VCO is now in lock.
Connect a frequency counter to the TX mixer output in the VCO, and adjust the VCO frequency to FRx + 21,4 Mhz by means of C95 in the ref. oscillator.
Check the lock range by turning C70 and read the values on MP3. The trimmer C70 should be turned app. on full turn before going out of lock, and the voltage on MP3 should vary correspondingly from 1 - 7 volts.
In multichannel sets, select the lowest and highest channel and check that the loop still goes into lock.
If the loop is out of lock, the lock det. will switch the transmitter off.
The sensitivity of the VCO is app. 1 Mhz/V, which means that within the max. bandwidth of 2 Mhz, the loop voltage must be between 3 - 5 volts. C 66 - 5,6p must be changed together with C 71 for lower frequency purposes.

TUNING OF THE RECEIVER

21,4 Mhz and 455 Khz IF.

Connect a 21,4 Mhz sweep Generator to the gate of Q 2 on print board TP103, and the DC-probe to MP 2.
Adjust L7 and L8 to min. ripple. L9 and L10 are tuned to max. amplitude and best possible symmetry.
Notice that the input level from the sweep generator is kept below the limiting level of the second mixer.
Connect the probe to the "disc out" pin, and adjust L11 to max. discriminator slope and best linearity.
Or: Use a 30 Mhz scope on D4 (10mV range) and a signal generator on antenna input and tune L7-8-9-10 to max. signal and min. distortion. Reduce input signal to 5uV. Move scope to disc. out and tune to min. dist. and max. output (200 mV pp range). The signal gen. is modulated with 1000 Hz and 8 Khz deviation. Test the sensitivity with 1000 Hz and 3 Khz deviation.

Or: Use signalgenerator and Dc. millivoltmeter in 100 mV range and adjust all circuits to max. output on MP2. Keep DC millivoltmeter 100 mV range and decrease signalgenerator.
At last adjust detector output on L11 with oscilloscope to min. distortion in 200 mV pp range.

TUNING INSTRUCTIONS TP 3000 2m.

RF-amplifier and mixer.

Connect a DC-voltmeter to MP1 and adjust L5 and L6 to max. deflection appr. 0.7 volt DC.
Connect a signal generator to the receiver input, and adjust L1, L2, L3 and L4 to max. sensitivity, which should be appr. 0.5 uV e.m.f. at 20 db SINAD.

AF-amplifier and squelch.

Connect the signal generator to the receiver input, adjust the attenuator to 1mV and deviation to +/- 3 Khz at 1000 Hz.
Connect an AF-millivoltmeter to the "disc.out" and read app. 120 mV R.M.S.
Connect a 4 ohm, 5 W resistor to the loudspeaker output and an AC-voltmeter accros the resistor. Adjust the volume control to the last but one step and read app. 3 VAC.

TUNING OF THE TRANSMITTER

Transmitter mixer and amplifier TP 106.

Connect a DC-voltmeter to MP1 and adjust C25-L11-L12-L2-L3 to max. deflection.
Start up tuning with 30 Mc scope on C 25-L11-L12 in 50 mV range.
Check with a high frequency AC-voltmeter the VCO injection on the VCO input and read app. 0.2 VAC.
Connect the DC-voltmeter to MP3 and adjust L4 to max. deflection.
Move the probe to MP4 and tune L5 and L6 to max. app. 1.0 VDC.
Tune L7 and L8 to max. on MP5 app. 1.4 volts.
Now connect a wattmeter to the output of the amplifier, TP 6 and tune to max output power by means of (C23) L9-L10.
The output power should be app. 200 mW into 50 ohm.
Note that the condenser Cx accros the coil L11-L12, must be changed when the Tx-x-tal is changed.
When x-tal is 10,7 Mhz Cx is 22 pF.
When x-tal is higher than 10,7 Mhz Cx is 10 pF.
When x-tal is lower than 10,7 Mhz Cx is 47 pF.

Transmitter output stage TP 107.

Connect a wattmeter (50 ohm, 25W) to the transmitter output.
Set the supply voltage to 12,0 volt.
Turn the potentiometer R12 counter-clockwise to get the output power stabilization out of function.
Key the transmitter and adjust C3, C32 and C33 to max. output power.
Increase the supply voltage to 13,2 V and turn the potmeter clockwise until the desired output power is reached.
It is not recommended to use higher outputs than 25 watts.

Transmitter frequency.

Connect a frequency counter to the wattmeter and adjust the transmitter frequency with the capacitor C48 on print board TP 106. Check the VCO frequency before setting the Tx frequency.

Modulation amplifier TP 106.

Connect a deviationmeter to the transmitter output and a tonegenerator to the modulation input.
Turn the potentiometers P1 and P2 to center position and set the tonegenerator frequency to 1000 Hz.
With an input level of 20 mV. the potentiometer P2 is adjusted to give +/- 5Khz deviation.

TUNING INSTRUCTIONS TP 3000 2m.

Modulation amplifier TP 106

Decrease the input level 20 db to 2 mV an adjust P1 to give +/- 3 Khz deviation.
Repeat the procedure and readjust if necesarry.
With an input level of 20 mV, check the symmetry of the limited signal.
+ and - deviation should not differ more than 0,5 Khz.

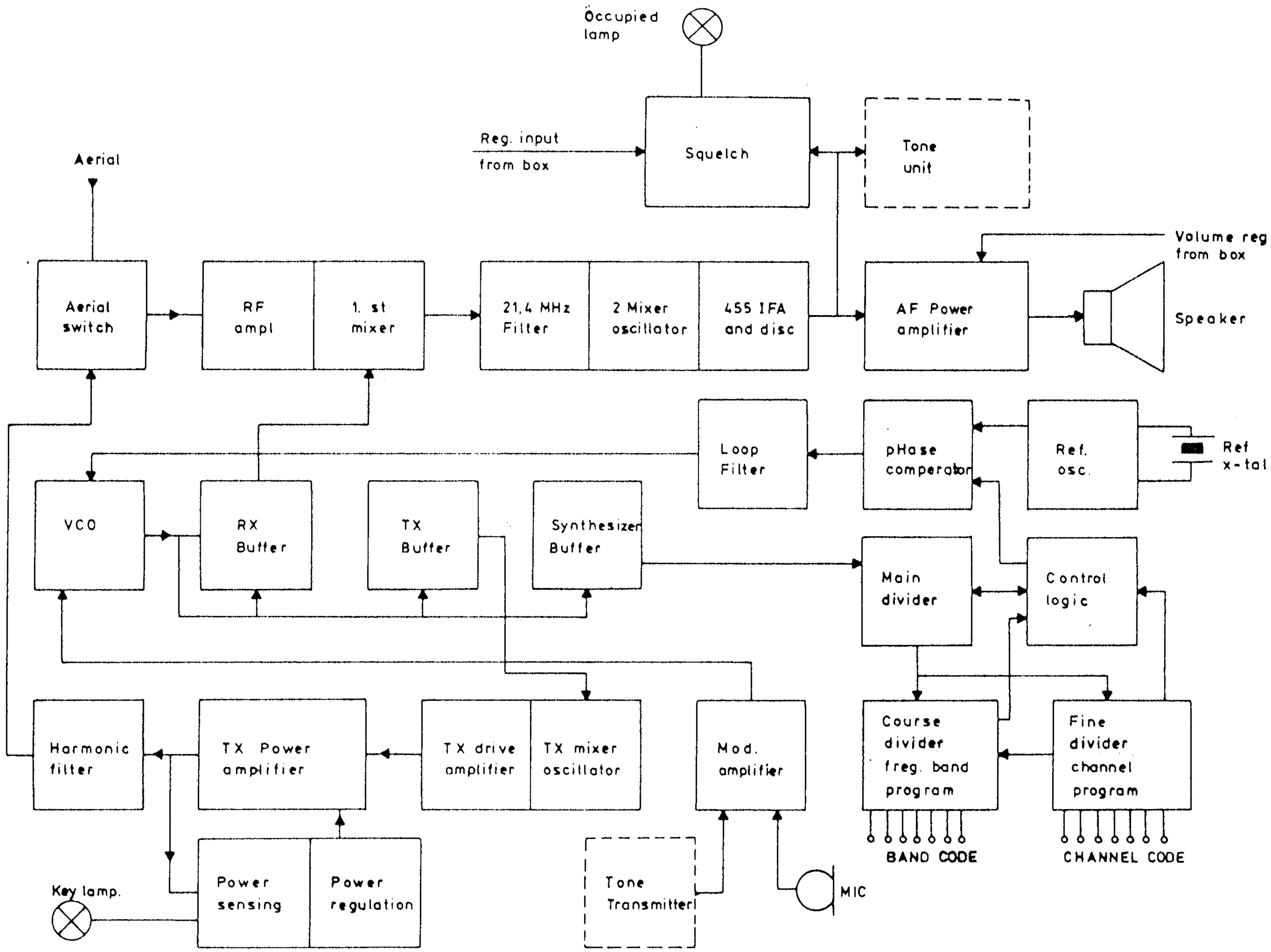

Block diagram TP 3000
Receiver - Transmitter

TP RADIO

DRAWING NO
EA/ 790303

JS 13.03.79

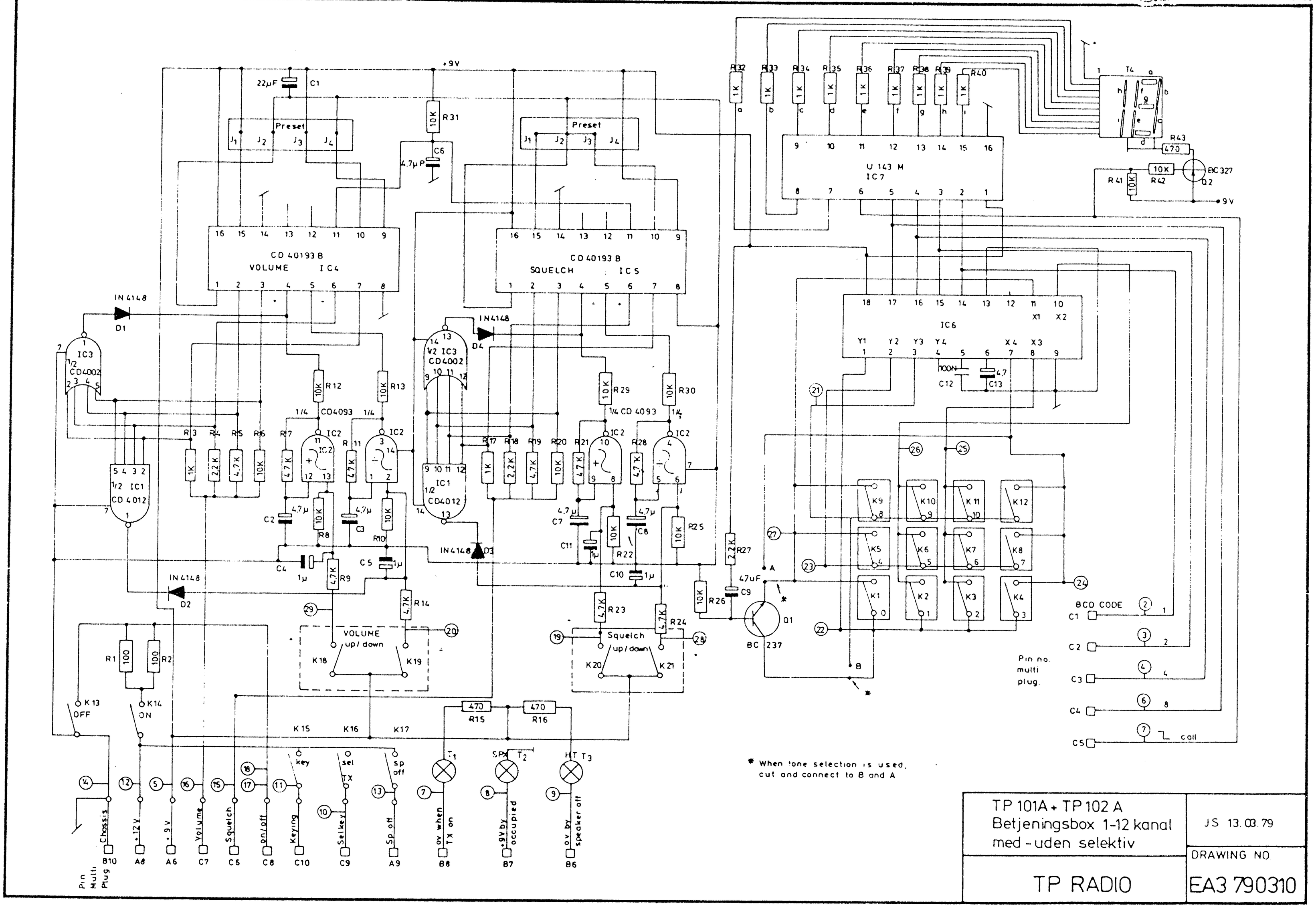
+9V
22µF C1
Preset
J1 J2 J3 J4
10K R31
C6 4.7µF
CD 40193 B
VOLUME IC4
SQUELCH IC5
IN4148
D1
D2
D3
D4
IC3 1/2 CD4002
1/4 CD4093 IC2
IC1 1/2 CD4012
R12 R13 R29 R30
R3 R4 R5 R6 R7 R8 R9 R10 R14 R17 R18 R19 R20 R21 R22 R23 R24 R25 R26 R27
C2 C3 C4 C5 C7 C8 C9 C10 C11 C12 C13
U 143 M IC7
R32 R33 R34 R35 R36 R37 R38 R39 R40
T4
R43 470
R41 10K
R42 10K
BC 327 Q2
IC6
X1 X2 Y1 Y2 Y3 Y4 X4 X3
100N
4.7
K1 K2 K3 K4 K5 K6 K7 K8 K9 K10 K11 K12
BCD CODE
C1 C2 C3 C4 C5
call
Pin no. multi plug.
Q1 BC 237
A
B
*
VOLUME up/down
K18 K19
Squelch up/down
K20 K21
R1 100 R2 100
K13 OFF
K14 ON
K15 K16 K17
R15 470 R16 470
T1 T2 T3
SP
HT
key
sel TX
sp off
Chassis
+12 V
+9 V
Volume
Squelch
on/off
Keying
Selkey
Sp. off
0V when TX on
+9V by occupied
0 V by speaker off
B10 A8 A6 C7 C6 C8 C10 C9 A9 B8 B7 B6
Pin Multi Plug
* When tone selection is used, cut and connect to B and A
TP 101A + TP 102 A
Betjeningsbox 1-12 kanal
med - uden selektiv
JS 13.03.79
DRAWING NO.
TP RADIO
EA3 790310

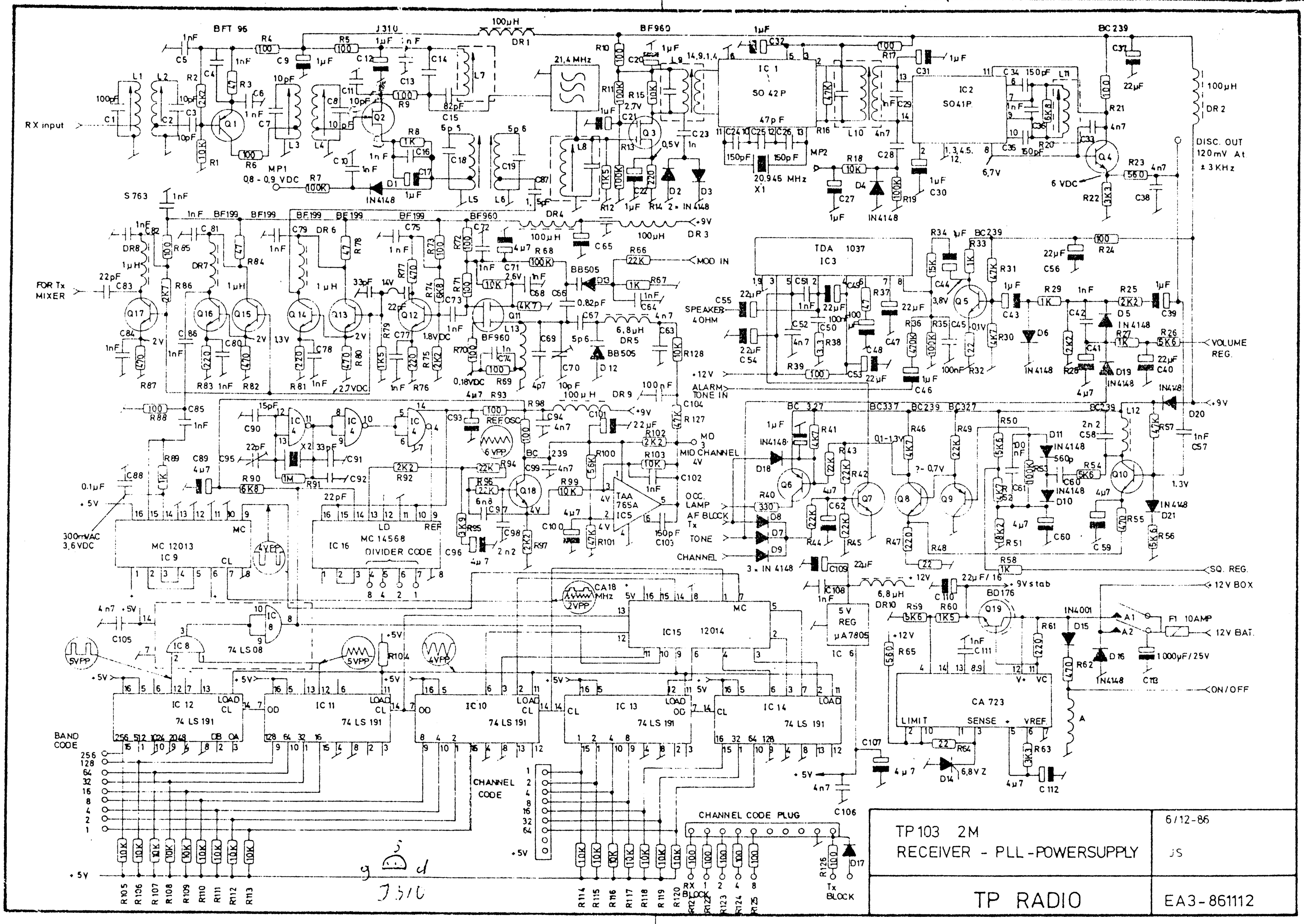
RX input
FOR Tx MIXER
DISC. OUT 120mV At ±3KHz
MOD IN
VOLUME REG.
SPEAKER 4OHM
ALARM TONE IN
MID CHANNEL
OCC. LAMP
AF BLOCK Tx
TONE
CHANNEL
SQ. REG.
12V BOX
12V BAT.
ON/OFF
BAND CODE
CHANNEL CODE
CHANNEL CODE PLUG
RX BLOCK
Tx BLOCK
TP 103 2M
RECEIVER - PLL-POWERSUPPLY
6/12-86
JS
TP RADIO
EA3-861112

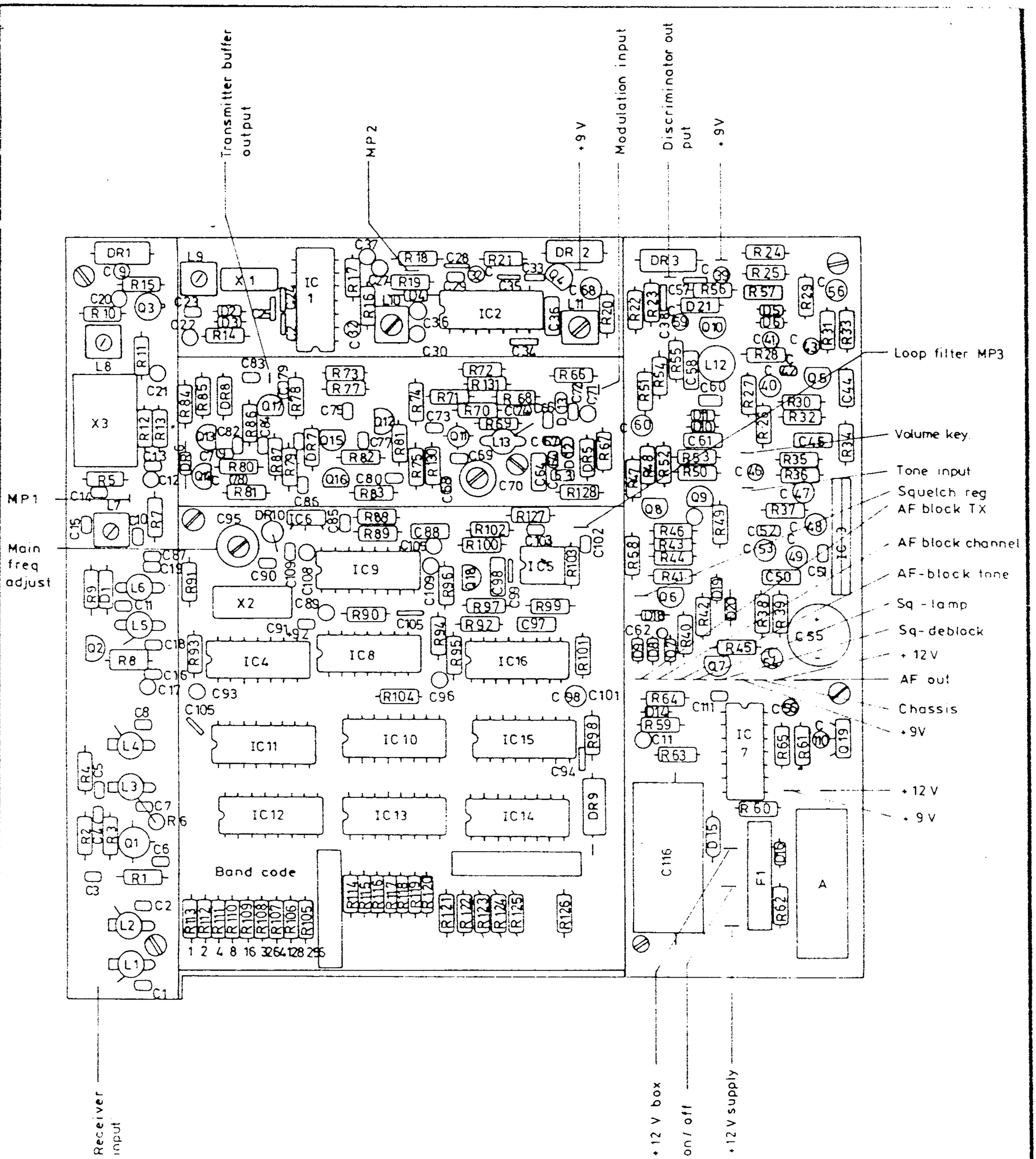

Component Lay out Print TP103 Receiver - Logic - VCO - Powersupply	JS 28.08.79 COR. 05.01.87
TP RADIO	DRAWING NO. EA4-790821

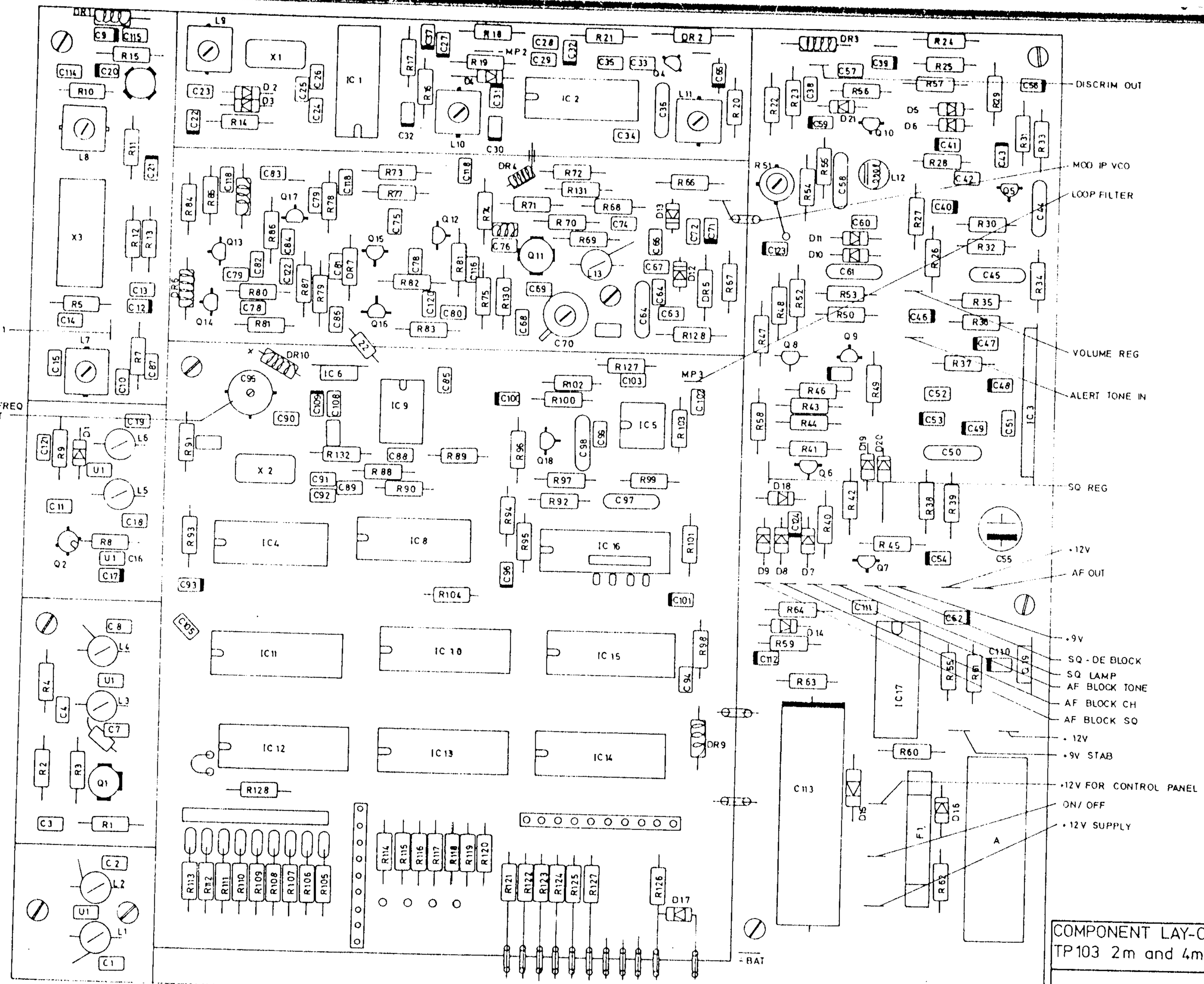

COMPONENT LAY-OUT TP 103 2m and 4m	JS 08 09 87
TP RADIO	EA3-870909

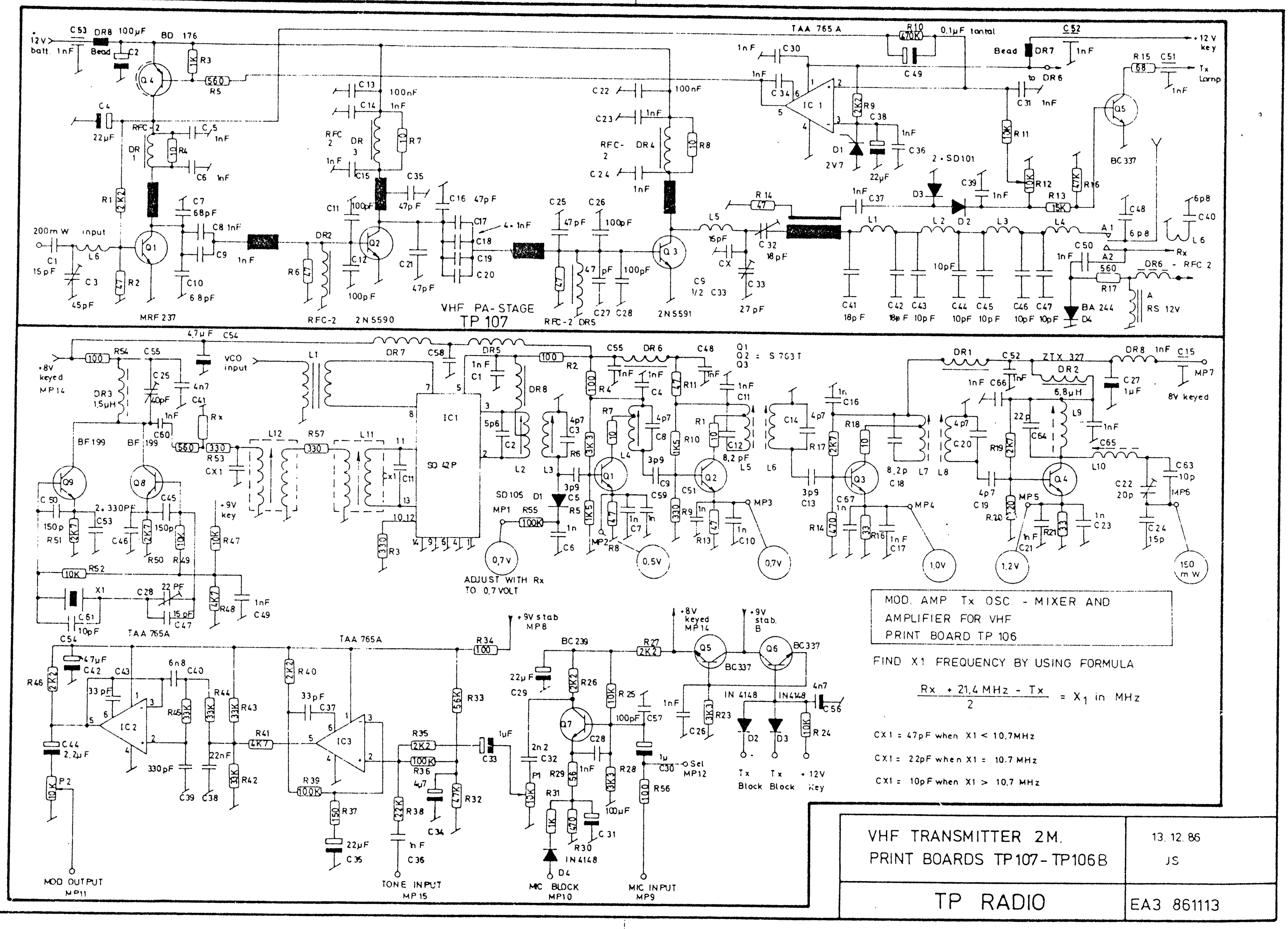

VHF TRANSMITTER 2M. PRINT BOARDS TP107 - TP106B	13. 12. 86 JS
TP RADIO	EA3 861113

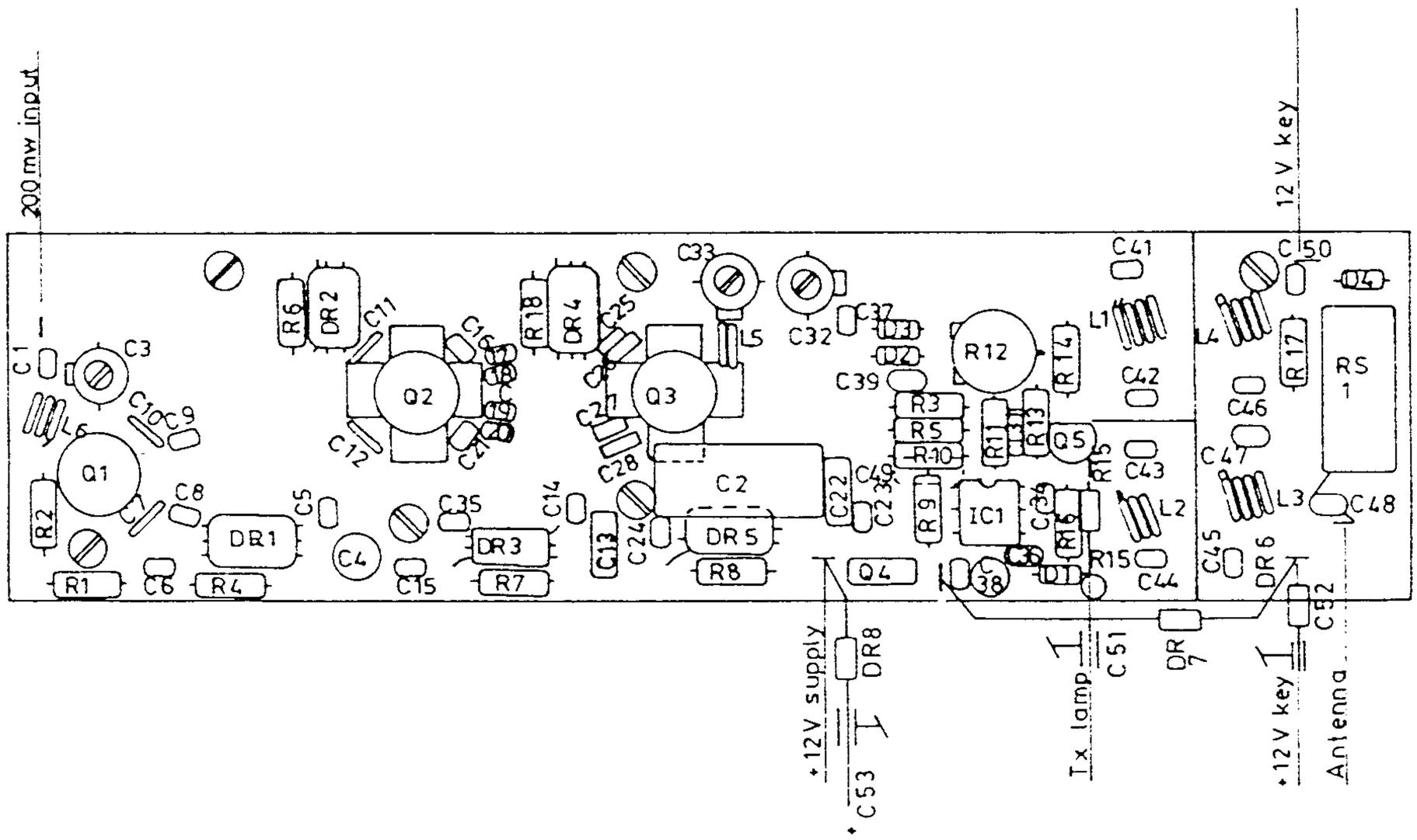

Component lay out print board TP 107 2,5- 25W PA-STAGE 2m	JS 28.08.79 COR.05.01.87
TP RADIO	DRAWING NO. EA4-790820

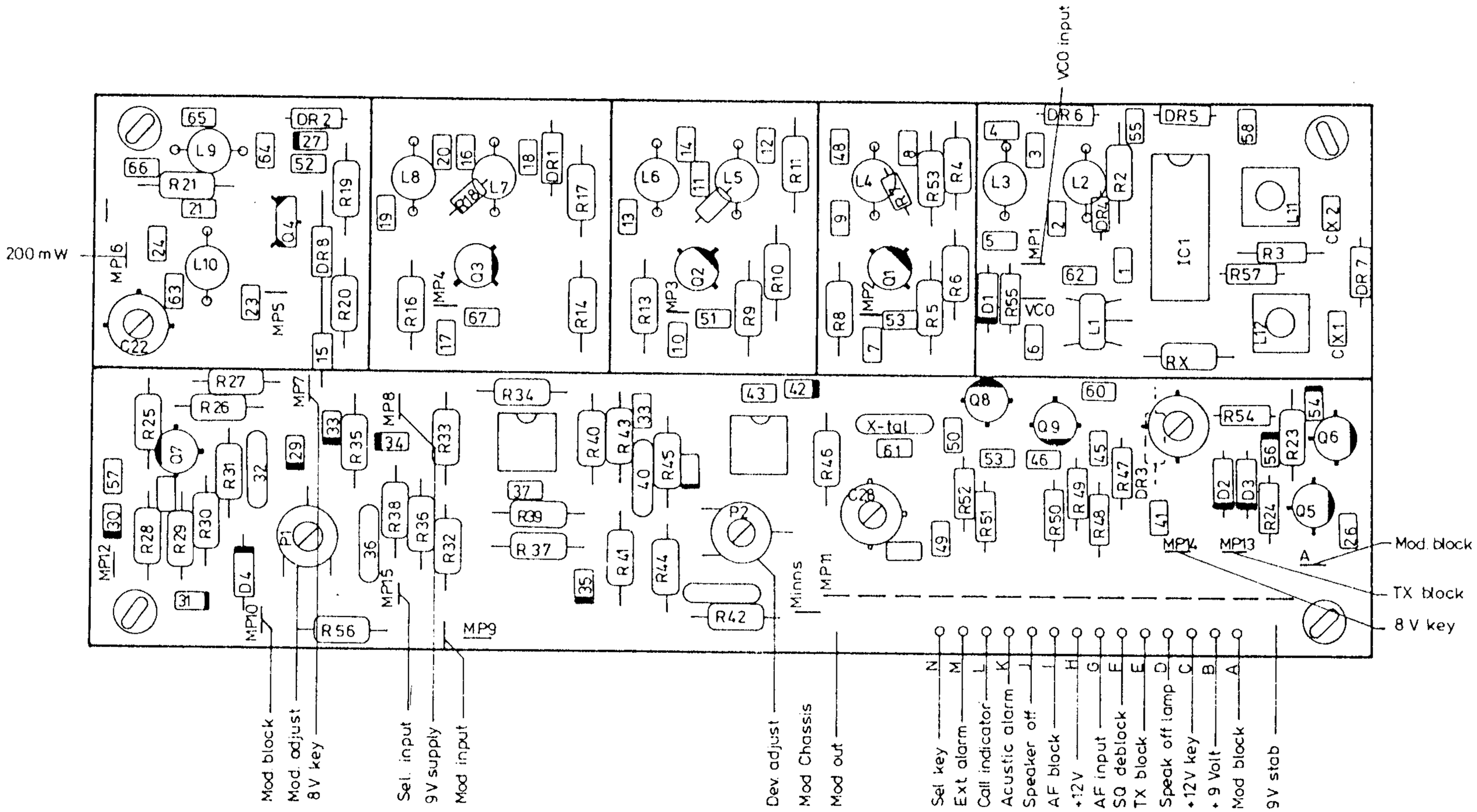

Component lay out TP 106 B	01 04 87 AP
TP RADIO	EA3 - 870602

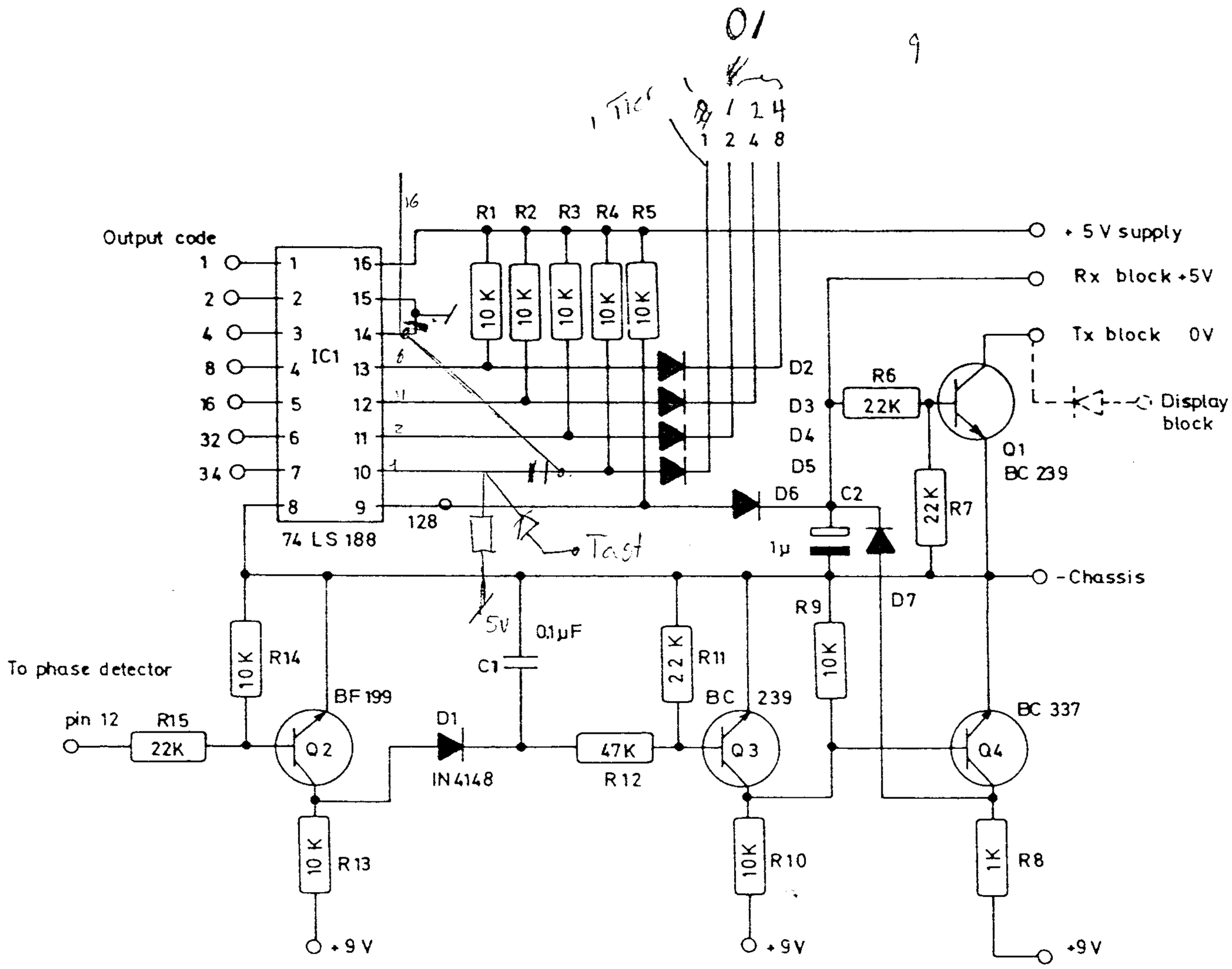

Print board TP 121

Code plug for max. 12 channels
with lock control circuit

13. 05. 80
JS

DRAWING NO.

TP RADIO

EA4-800503

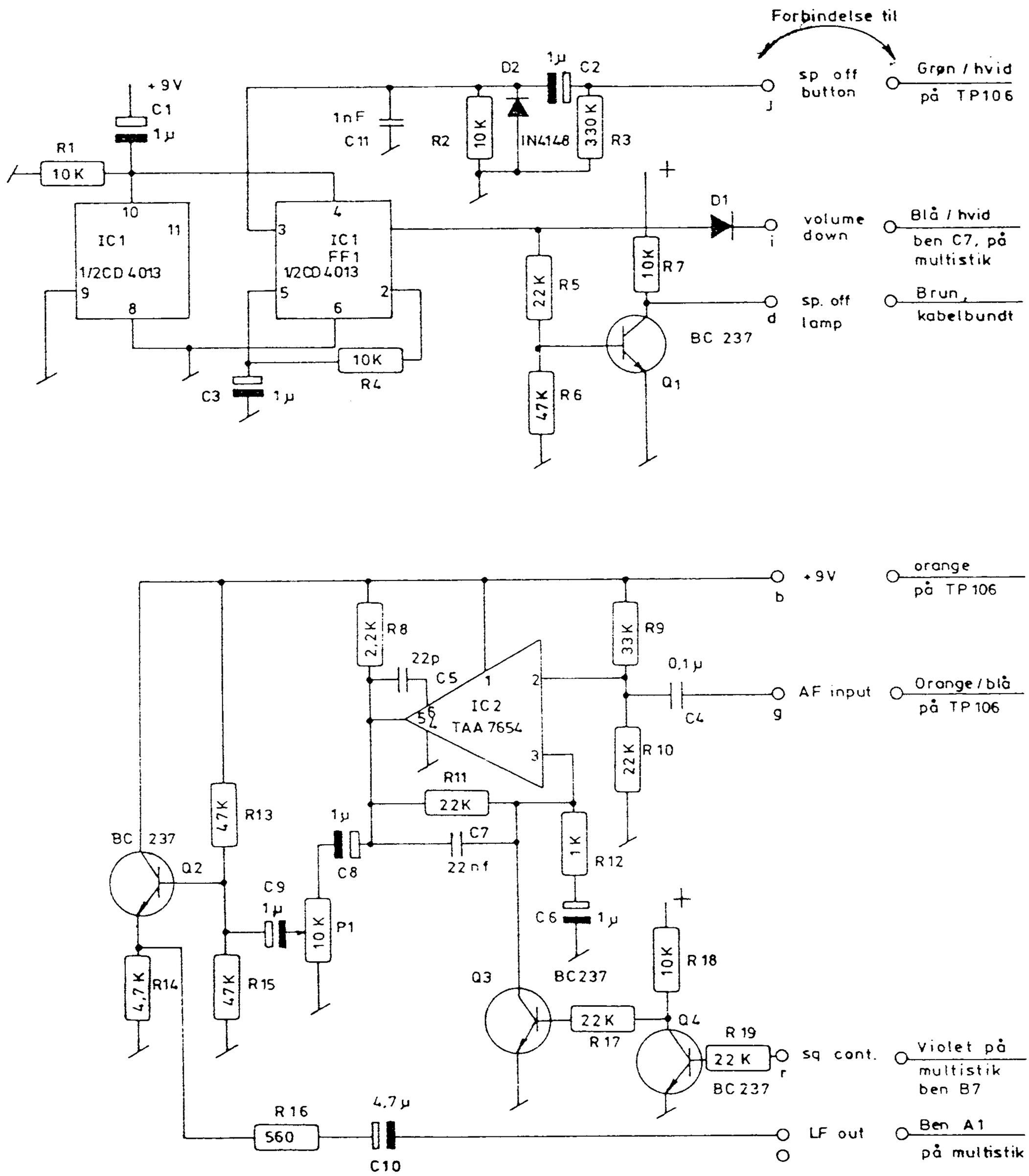

Print board TP 117
Volume down control and AF-Buffer amplifier

JS 9. 11. 79

TP-RADIO

DRAWING NO
EA4-791124

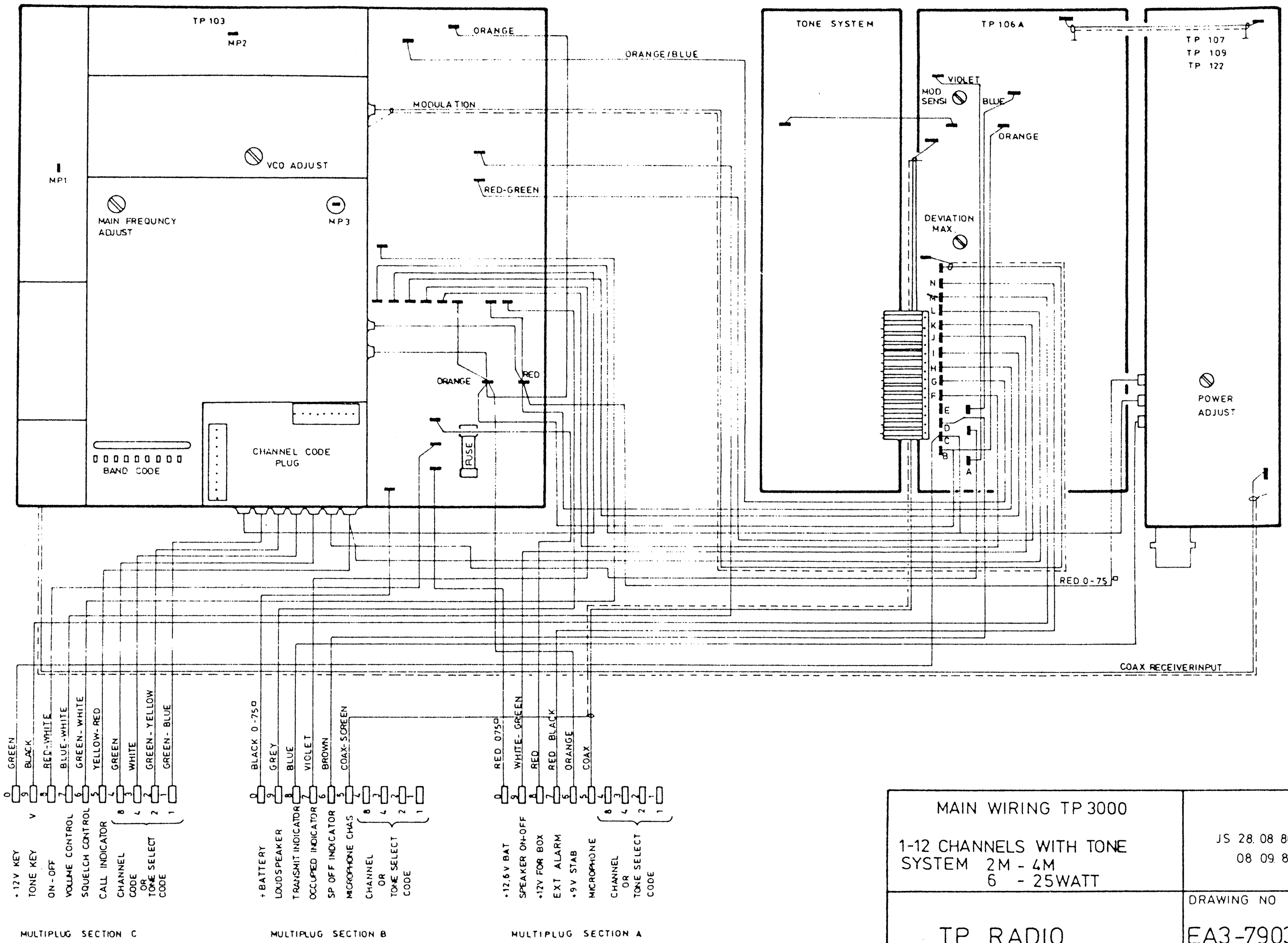

MAIN WIRING TP 3000 1-12 CHANNELS WITH TONE SYSTEM 2M - 4M 6 - 25WATT	JS 28.08 80 08 09 87
TP RADIO	DRAWING NO EA3-790305

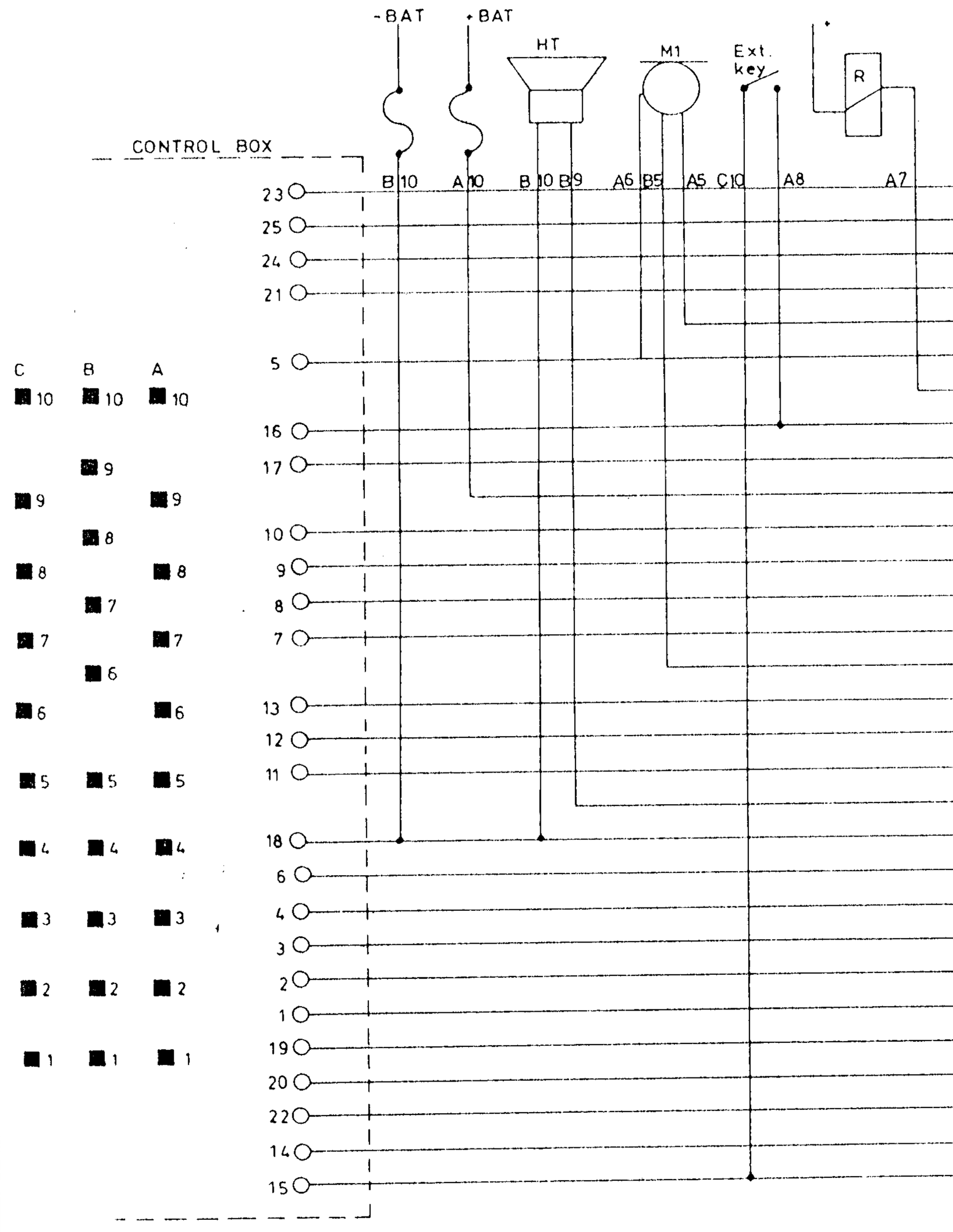

The „R" contacts may operate signal horn relay.

MULTICONNECTOR		1 FUNCTION	2 FUNCTION	3 FUNCTION
A1	RED-BROWN	POINTS	AF OUT	BCD CODES 1
2	RED-GREY	3 STATE CONT.		2
3	BLUE-BLACK	SCANNING	K1	4
4	BLUE-BROWN	STORE	K2	8
5			MICROPHONE	
6	ORANGE		+9V	
7			EXT. ALARM	
8	RED		+12V FOR BOX	
9	ROSA		SPEAK ON/OFF	
10	RED 2,5□		+12V BAT	
B1	BLUE		1	
2	YELLOW		2 BCD	
3	BROWN		4 CODES	
4	VIOLET		8 „ONES"	
5			MICRO SCREEN	
6	GREEN DARK		SPEAK OFF LAMP	
7	WHITE		OCCUPIED LAMP	
8	GREY		TRANSMIT LAMP	
9	GREY HT		SPEAKER	
10	BLACK 2,5□		-BAT	
C1	RED-ORANGE		1	
2	RED-WHITE		2 BCD	
3	RED-BLACK		4 CODES	
4	BLUE-WHITE		8 „TENS"	
5	BLUE GREY		CALL INDICAT.	
6	RED-GREEN		SQ. REGUL.	
7	BLUE-GREEN		VOL. REGUL.	
8	BLUE-YELLOW		ON-OFF	
9	GREEN LIGHT		TONE KEY	
10	RED-BLUE		KEY	

Installation TP 3000
Control box BB2 + BB3

J.S. 27.08.81

TP RADIO

DRAWING NO.
EA4-800710

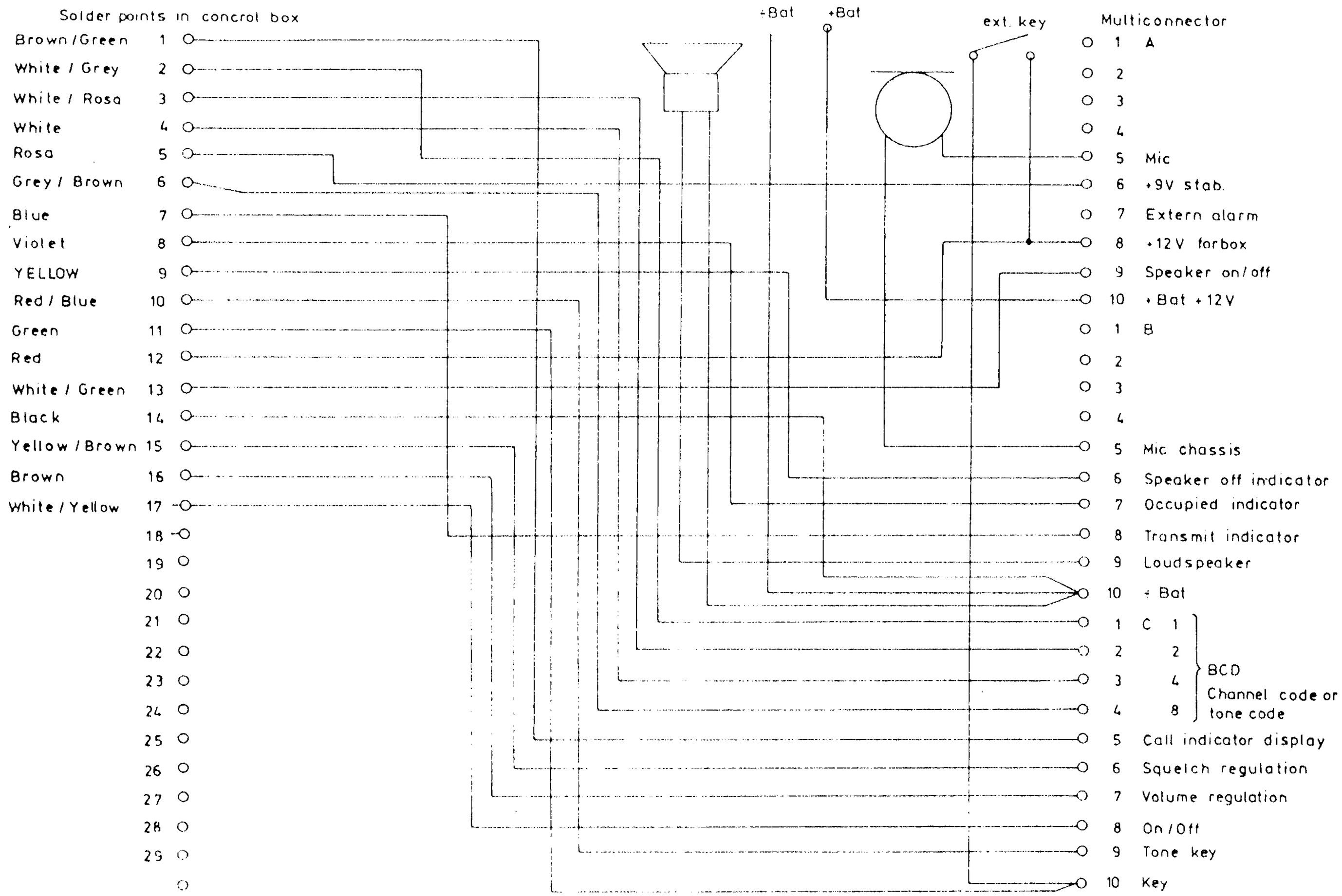

TP RADIO

Installation of TP 3000
1-12 channels

JS 28 08 79

DRAWING NO.
EA4-790304

Rx Tx	1 2 4 8 16 32 64 128	Hex
144,625 =	1 1 1 1 1 0 0 0	1F
144,650 =	0 0 0 0 0 1 0 0	20
144,675 =	1 0 0 0 0 1 0 0	21
144,700 =	0 1 0 0 0 1 0 0	22
144,725 =	1 1 0 0 0 1 0 0	23
144,750 =	0 0 1 0 0 1 0 0	24

Simplex

Rx

145,600 =	0 1 1 0 0 0 1 0	46
145,625 =	1 1 1 0 0 0 1 0	47
145,650 =	0 0 0 1 0 0 1 0	48
145,675 =	1 0 0 1 0 0 1 0	49
145,700 =	0 1 0 1 0 0 1 0	4A
145,750 =	0 0 1 1 0 0 1 0	4C

Tx

145,000 =	0 1 1 1 0 1 0 0	2E
145,025 =	1 1 1 1 0 1 0 0	2F
145,050 =	0 0 0 0 1 1 0 0	30
145,075 =	1 0 0 0 1 1 0 0	31
145,100 =	0 1 0 0 1 1 0 0	32
145,150 =	0 0 1 0 1 1 0 0	34

Repeater